Rexroth
Bosch Group

Rexroth Frequency Converter Fe 0.75 kW to 7.5 kW / 400 VAC

Simple, scalable and economical

Bosch Rexroth is the worldwide leader in all relevant drive, control and motion technologies – with industry-specific automation systems and innovative components.

Contents

Further informations: www.boschrexroth.com/fe

Bosch Rexroth – Competence in automation

With our broad portfolio of products and services we are geared to responding swiftly and flexibly to all your requirements – starting from development and production, right through to sales and service. Working in co-operation with you, the customer, we will come up with the perfect solution for every application. Our products, combined with our high level of consulting expertise, will give you that decisive competitive advantage, at the same time minimizing your technical and financial outlay. And what's more, our proximity to our customers worldwide enables us to meet the exacting quality requirements of our customers at any time and anywhere, thus always maximizing the benefits of our products.

Rexroth is unique. No other brand on the world market can offer its customers all drive and control technologies, both on a specialized and integrated basis. We are considered to be the worldwide benchmark when it comes to drives, controls and motion. Our technological leadership is continually setting us new challenges, with approximately 33,000 employees in more than 80 countries around the world. This is possible thanks to an infrastructure designed always with partnership and customer proximity in mind. As a company Bosch Rexroth can look back on more than 200 years of tradition. As a wholly-owned subsidiary of Robert Bosch GmbH we are part of a globally-operating technology group. All this is both our drive and our commitment. And it's unique – just like Bosch Rexroth. The Drive & Control Company.

Everything you need for drive, control and motion:

- Electric Drives and Controls
- Industrial Hydraulics
- Mobile Hydraulics
- Linear Technology
- Assembly
- Pneumatics

Frequency Converter Fe – The compact converter series

Rexroth Frequency Converter Fe is the new, economical range of converters for open-loop applications. With its compact format the standard frequency converter cover the entire drive range from 0.75 to 7.5 kW. Frequency Converter Fe is setting new standards in its class with all basic functions including simple installation, start-up and operation.

- utilize DSP (digital micro-processor) with higher performance
- automatic adjust the carrier wave frequency at over heating
- using new protections technology, which is more suitable for severe environment
- using the cooling fan automation technology, which can realize the effective energy saving and extend the lifecycle of fan
- standard with speed encoder input can realize high precision through speed closed loop
- control without PG card
- realize the non-trip continuous operation of frequency converter
- during the hard start-up or impact load
- multipoint-V/F characteristic curve (programmable)
- after the power interruption or failure trip, it can select the function of automatic restart and set up restart delay time
- powerful overload ability: 150% rated current for 1 min; 200% rated current for 0.5 s
- standard with easy PLC functions can realize various operation modes through control terminal
- standard with RS485 communication interface
- frequency pulse output can be used for synchronous operation of various motors
- three-level menu parameter
- setting mode can control the operation of frequency converter simply and rapidly
- the complete unit adopts the advanced and optimized electromechanical design, select high performance and high reliable components so that ensure the whole unit can be used reliably for a long lifecycle

Frequency Converter Fe – Type code and technical data

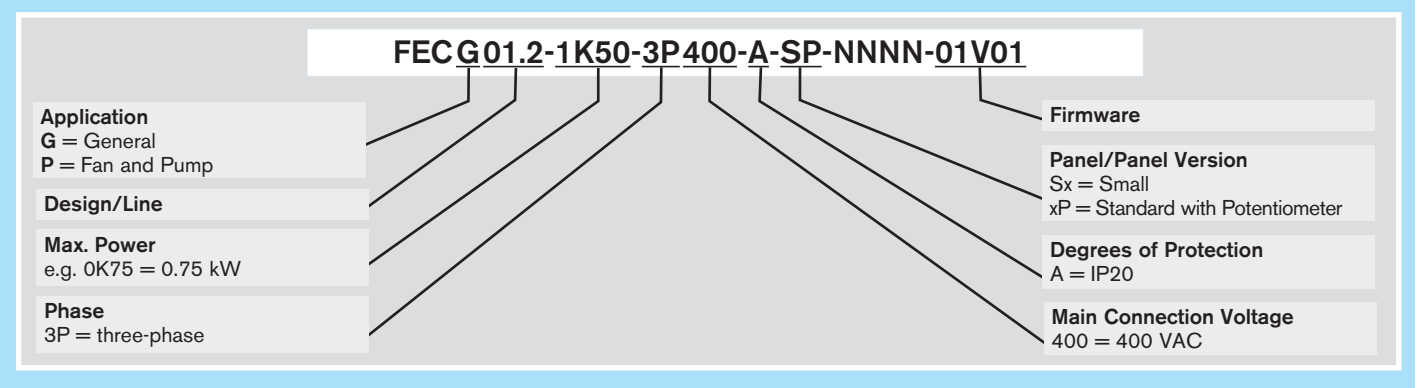

Drive	Power	Rated current	Apparent power
	kW	A	kVA
FECG01.2-0K75-3P400-A-SP-NNNN-01-V01	0.75	2.5	1.9
FECG01.2-1K50-3P400-A-SP-NNNN-01-V01	1.50	4.0	3.0
FECG01.2-2K20-3P400-A-SP-NNNN-01-V01	2.20	5.5	4.0
FECG01.2-4K00-3P400-A-SP-NNNN-01-V01	4.00	10.0	7.6
FECG01.2-5K50-3P400-A-SP-NNNN-01-V01	5.50	13.0	9.9
FECG01.2-7K50-3P400-A-SP-NNNN-01-V01	7.50	17.0	13.0

Function		Specification
Input	Rated voltage; frequency	Three-phase: 380 to 460 V; 50/60 Hz
Output	Allowable change	Voltage: ± 10 %, frequency: 50/60 Hz ± 5 %
	Rated voltage	Corresponding input voltage
	Frequency range	0 to 300 Hz
	Overload ability	150 % rated current, 1 min; 200 % rated current, 0.5 s
Main control performance	Modulation mode	Magnetic flux PWM modulation
	Range of speed regulation	1:100
	Torque characteristic	Torque and slip compensation, starting torque can reach over 150 % at 5 Hz
	Frequency resolution	Digital setting: 0.01 Hz; analog setting: maximum frequency x 0.1 %
	V/F curve	Random V/F curve setting
	Acceleration-deceleration curve	Linear, S-curve
	Direct current braking	Start frequency: 0.00 to 60.00 Hz, Braking time: 0.00 to 10.0 s
	Multi-speed operation	Through built-in PLC or control terminal
	Multi-function output signal	During the RUN operation, over frequency level, below frequency level, within frequency range, out of frequency range, under-voltage, overload etc...
	Automatic energy saving operation	According to the condition of loading, optimize V/F curve automatically and realize energy saving operation
	Automatic voltage regulation (AVR)	Constant output voltage maintained during input voltage changes
	Rapid current limitation	Rapidly limit the current during the operation, prevent frequent overcurrent failure brake trip
	Automatic carrier adjustment	According to the load characteristics, adjust the carrier frequency automatically
Customization functions	Operate command channel	Control panel, control terminal or RS485
	Frequency reference setting	Digital inputs, analog voltage input, analog current input, RS485
	Assistant frequency reference	Flexible auxiliary frequency trimming, frequency synthesis
	Programmable analog outputs	Two analog outputs 0/4 ~ 20 mA or 0/2 ~ 10 V
Operation panel	LED display	Setpoint frequency, output frequency, output voltage, output current and other parameters
Protection function	Overcurrent, overvoltage, under-voltage, overheat, overload etc...	
Optional accessories	Braking assemblies, remote controllers, copy units, remote communication cables and bus adapter	
Environment	Suitable environment	Height = 1,000 m, non-corrosiveness gas, liquid, dust and dirt
	Ambient temperature	-10 to +40 °C (40 to 50 °C deration is required)
	Humidity	< 90 % RH

Frequency Converter Fe – Dimensions and installation

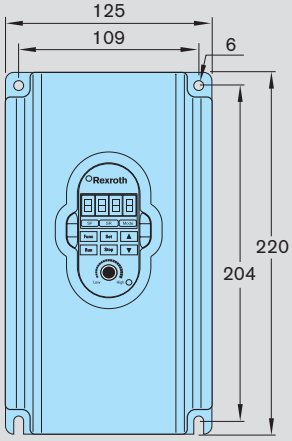

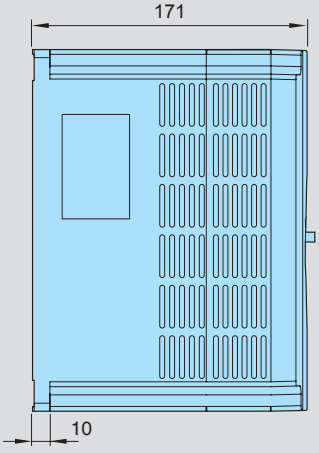

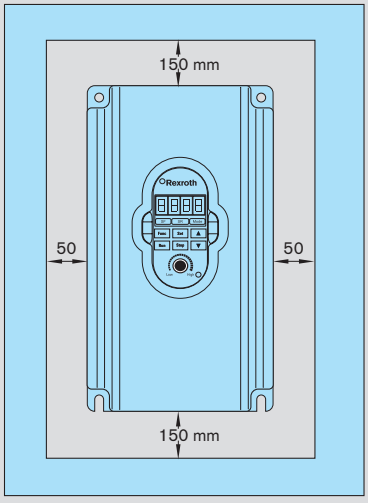

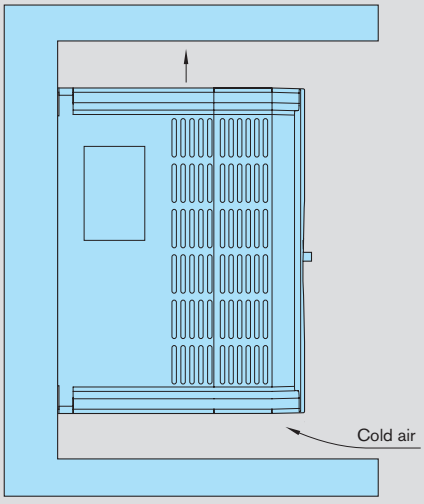

Frequency Converter Fe – Block diagram

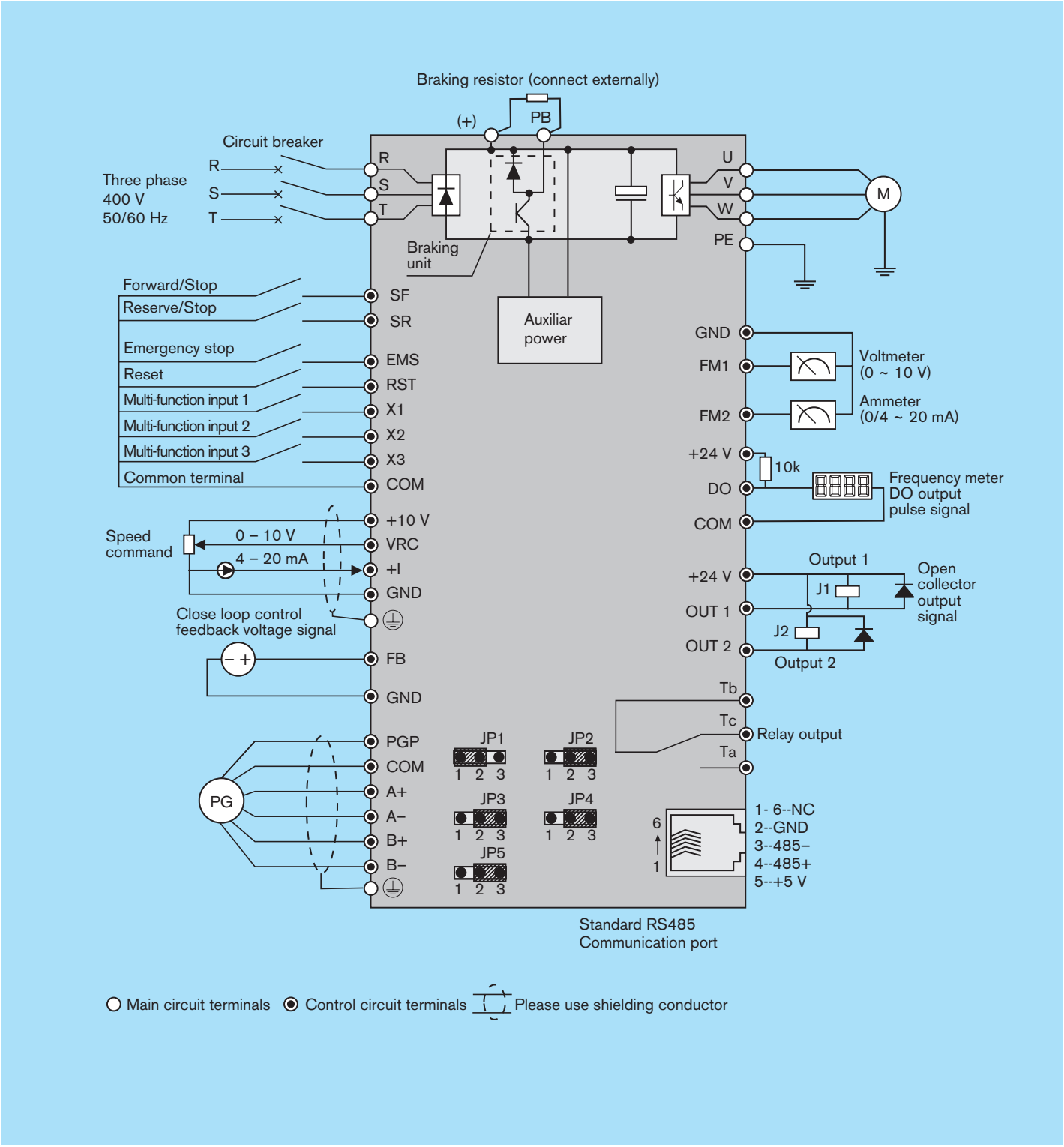

Frequency Converter Fe – Terminal description

Category	Terminals	Signal function	Description	Signal requirement
Switch Input Signal	SF	Forward/Stop signal	–	Optical isolator input 24 VDC 8 mA 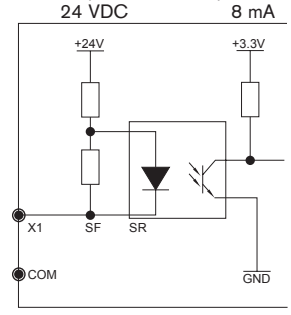
	SR	Reverse/stop signal	–	
	RST	Fault reset	Close: reset	
	EMS	Emergency stop	0 = EMS-COM close and stop 1 = EMS-COM open and stop	
	X1, X2, X3	Multi-function input terminal	Close: active	
	COM	Common terminal for switch input signals	with isolator	
Analog Input Signal	FB	Feedback input signal	Feedback signal, analog voltage input	Input voltage range: 0 to 5 V, input resistance: 100 kΩ; Resolving rate: 1/1000
	+10 V	Speed command power terminal	Speed setting power	10 V (max current 10 mA)
	VRC	Frequency command	Analog voltage frequency setting	When JP5, 2–3 connection, input voltage range: 0 to 10 V, input resistance: 100 kΩ, resolving rate: 1/2000 When JP 5, 1–2 connection, input voltage range 0 to 5 V, input resistance: 50 kΩ, resolving rate: 1/2000
	+I		Analog current signal setting, feeback	Input current range: 4 to 20 mA, input resistance: 165 Ω, resolving rate 1/1000
	GND	Analog common	–	–
Switch Output Signal	OUT 1-COM	Open-collector output 1	Multi-function digital output terminal can be defined	Optical-isolator Open-collector output. Max ranting voltage: 24 VDC Allow output current: 50 mA
	OUT 2-COM	Open-collector output 2		
	DO-COM	Pulse output	Multi-function pulse output terminal can be defined	Optical-isolator Open-collector output frequency range decided by max. 50 kHz, max. rating voltage 24 VDC
	Ta	Relay ouput	Ta–Tb normally open; Tb–Tc normally close; (Tb is Common) Multi-function relay output terminal can be defined	Contactor capacity 250 VAC 3 A 30 VDC 3 A or more less
	Tc			
	Tb	Relay ouput common		
Analog Output Signal	+24 V	24 VDC power positive	COM is cathode	–
	FM1-GND	Multi-function analog output 1	Multi-function relay output terminal can be defined	You can select FM2, FM1 output voltage signal or output current by JP3, JP4 voltage range: 0/2 to 10 V current range: 0/4 to 20 mA
	FM2-GND	Multi-function analog output 2		
Encoders Signal	PGP-COM	+24 V power	Codded disk electric power supply	max. output current: 100 mA
	A+	Encoder signal A	JP2 short circuit module 2–3 connection selected the encoder's signal from A+, A–, B+, B– differential motion input: JP2: 1–2 connection, choice from the A, B collector inputs	When differential motion input the encoder's supply voltage range is: 8 to 24 V The highest input frequency is: 50 kHz
	A–			
	B+	Encoder signal B		
	B–			
Commu-nication	485+	485 Differential signal positive	Standard 485 communication port, please use twisted-pair cable or shielded cable	
	485–	485 Differential signal negative		

Frequency Converter Fe – Power supply

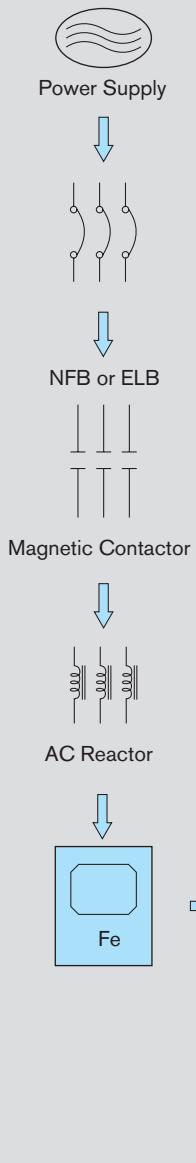

Power
Please supply the power to the rate value according to the manual.

No-fuse switch or leakage current breaker
It will be having larger current when open the power.
Please according to the follow chart chose the no-fuse switch or leakage current breaker.

Electromagnetic contactor
Please don't make the electromagnetic contactor use of mains switch, because it will reduce the converter life.

AC reactor
When the output capability is add a reactor in order to improve the power gene. The match-line distance is between 10 m.

Output filter
In case of motor cable more than 80 meters, to avoid broken of the motor insulation will be strong suggested to use output filter.

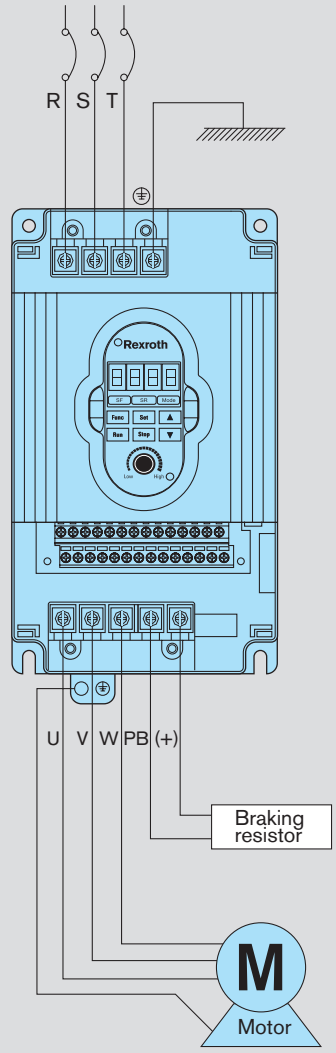

Terminal	Description Terminal specification M3 or M4
RST	Main circuit power input
UVW	Inverter output connecting with motor
PB (+)	Reserved terminals for braking resistor
(+)	Output terminal for DC positive bus
⏚	Earth terminal

Frequency Converter Fe – Accessories

Control panel
The control panel lies in the centre of the converter, divided into two parts: display part and pressed key control part. The display part provides the parameter setting mode and the converter operating condition.

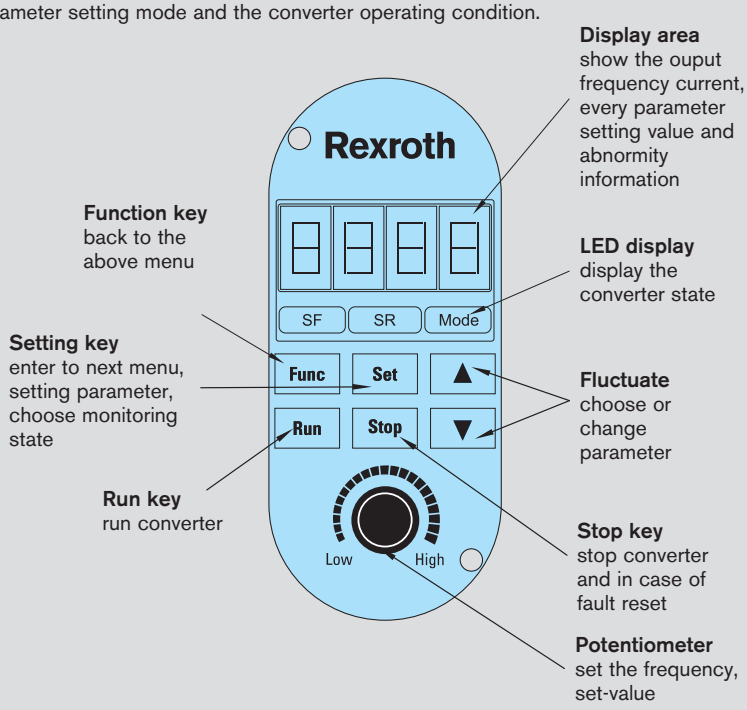

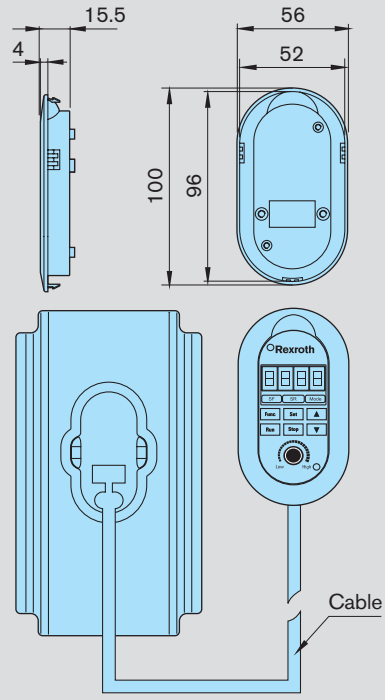

Braking resistor
The converter has brake chopper as standard, in case of quick braking please use the suggested brake resistor.

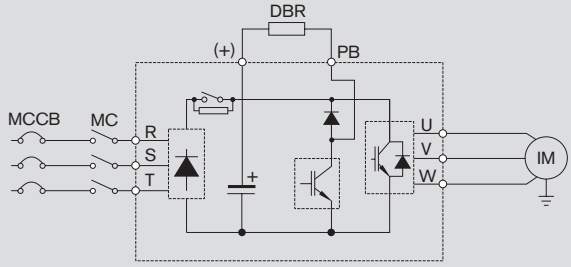

Frequency Converter Fe		Connection cable			Brake resistance		
Type	Power	Input lead switch	Main circuity lead (mm²)	Brake circuity lead (mm²)	Minimum resistance	Suggestion type	
		Circuit breaker QF (A)	Input/output lead	Brake terminals lead	Ω	Resistance (Ω)	Braking power (W)
FECG01.2-0K75-3P400-A-SP-NNNN-01-V01	0.75	10	2/2	1.25	560	820	300
FECG01.2-1K50-3P400-A-SP-NNNN-01-V01	1.5	10	2/2	1.25	300	470	600
FECG01.2-2K20-3P400-A-SP-NNNN-01-V01	2.2	15	2/2	1.25	200	300	800
FECG01.2-4K00-3P400-A-SP-NNNN-01-V01	4.0	20	2/2	2	120	180	1400
FECG01.2-5K50-3P400-A-SP-NNNN-01-V01	5.5	30	4/4	2	82	120	2000
FECG01.2-7K50-3P400-A-SP-NNNN-01-V01	7.5	30	6/6	2	62	91	2800

Rexroth
Bosch Group

Bosch Rexroth AG
Electric Drives and Controls
P.O. Box 13 57
97803 Lohr, Germany
Bgm.-Dr.-Nebel-Str. 2
97816 Lohr, Germany
Phone +49 9352 40-0
Fax +49 9352 40-4885
www.boschrexroth.com

Presented by

The data specified above only serve to describe the product.
As our products are constantly being further developed, no statements concerning a certain condition or suitability for a certain application can be derived from our information. The information given does not release the user from the obligation of own judgment and verification. It must be remembered that our products are subject to a natural process of wear and aging.

71 519 AE/2008-06–A1
R911324040
© Bosch Rexroth AG 2008
Subject to revisions!
Printed in Germany